kratki

FREE STANDING STOVE

AB

ADVANTAGES KOZA AB

KOZA AB S KAFEL CZARNY

KOZA/AB/S/DR/KAFEL/CZARNY

KOZA/AB/S/N/DR/KAFEL/CZARNY

KOZA/AB/S/N/O/DR/KAFEL/CZARNY

KOZA/AB/S/N/O/DR/GLASS/KAFEL/CZARNY

KOZA AB S KAFEL CZERWONY

KOZA/AB/S/DR/KAFEL/CZERWONY

KOZA/AB/S/N/DR/KAFEL/CZERWONY

KOZA/AB/S/N/O/DR/KAFEL/CZERWONY

KOZA/AB/S/N/O/DR/GLASS/KAFEL/CZERWONY

KOZA AB S KAFEL BIALY

KOZA/AB/S/DR/KAFEL/BIALY

KOZA/AB/S/N/DR/KAFEL/BIALY

KOZA/AB/S/N/O/DR/KAFEL/BIALY

KOZA/AB/S/N/O/DR/GLASS/KAFEL/BIALY

Kratki.pl Marek Bal ul. Warszawska 66, Wsola, 26-660 Jedlińsk, Poland, tel. 00 48 48 340 10 00, 00 48 48 384 44 88, fax 00 48 48 384 44 88 wew. 106
www.kratki.com, www.facebook.com/kratkien

ADVANTAGES KOZA AB

KOZA AB

KOZA AB S

KOZA/AB

KOZA/AB/S/DR

KOZA/AB/S/N/DR

KOZA/AB/S/N/O/DR

KOZA AB S N

KOZA AB S 2

KOZA/AB/S/N/DR/GLASS

KOZA/AB/S/N/O/DR/GLASS

KOZA/AB/S/2

KOZA AB2 S KAFEL

KOZA/AB/S/2/KAFEL/BIAŁA

KOZA/AB/S/2/KAFEL/CZARNA

KOZA/AB/S/2/KAFEL/KREM

Kratki.pl Marek Bal ul. Warszawska 66, Wsola, 26-660 Jedlińsk, Poland, tel. 00 48 48 340 10 00, 00 48 48 384 44 88, fax 00 48 48 384 44 88 wew. 106
www.kratki.com, www.facebook.com/kratkien

ADVANTAGES AB/S/DR

- Top or rear outlet of gases
- System of two deflectors – steel and Acumotte - which increases the exhaust path
- Triple system of airing the combustion chamber: primary and secondary air and the air curtain (system of clean glass)
- Combustion chamber is lined with ceramic Acumotte 25mm thick
- Air regulator
- Built-in air intake connector fi 100 mm Regulation of primary air intake under the grate
- Chamber under the furnace is equipped with "push to open" mechanism – opening by pressure
- Moving, rotating cast iron grate

	KOZA/AB	KOZA/AB/S/DR	KOZA/AB/S/DR/KAFEL/BIALY KOZA/AB/S/DR/KAFEL/CZERWONY KOZA/AB/S/DR/KAFEL/CZARNY
kW	8	8	8
<kW<	5,5-10,5	5,5-10,5	5,5-10,5
	150	150	150
	~ 78%	~ 78%	~ 78%
	250	250	250
CO	0,08%	0,08%	0,08%
°C	275	275	275
kg	145	126	116
	boiler steel, liner of the combustion chamber Acumotte, cast iron grate		
	seasonal hardwood (humidity max 20%)		

Kratki.pl Marek Bal ul. Warszawska 66, Wsola, 26-660 Jedlińsk, Poland, tel. 00 48 48 340 10 00, 00 48 48 384 44 88, fax 00 48 48 384 44 88 wew. 106
www.kratki.com, www.facebook.com/kratkien

ADVANTAGES KOZA AB/S/N/DR

- Modern cylindrical shape
- Top or rear flue gases exits (using a rear exit it is required to buy also a blind of a top plate)
- Material: combustion chamber, the stove body, top plate and door made of steel
- A system of two baffles that extends the flue gas path
- The door are equipped with a modern sliding handle (door closing system is an additional option)
- Large glazed door with a semicircular glass
- Combustion chamber is lined with 25 mm thick ceramic Acumotte - Movable and rotary iron grate
- An air regulator
- The chamber underneath the stove is equipped with a mechanism „push to open" opening by pressure
- Built in external air inlet fi 100 mm regulation of primary air intake under the grate
- Triple system of the air supply to the combustion chamber: primary air and secondary air supply and air curtain (clean glass system)

	KOZA/AB/S/N	KOZA/AB/S/N/KAFEL/BIALY KOZA/AB/S/N/KAFEL/CZERWONY KOZA/AB/S/N/KAFEL/CZARNY	KOZA/AB/S/N/GLASS	KOZA/AB/S/N/O/GLASS/KAFEL
kW	8	8	8	8
<kW<	5,5-10,5	5,5-10,5	5,5-10,5	5,5-10,5
	150	150	150	150
	~ 78%	~ 78%	~ 78%	~ 78%
	250	250	250	250
CO	0,08%	0,08%	0,08%	0,08%
°C	275	275	275	275
kg	107	105	110	120
	boiler steel, liner of the combustion chamber Acumotte, cast iron grate			
	seasonal hardwood (humidity max 20%)			

Kratki.pl Marek Bal ul. Warszawska 66, Wsola, 26-660 Jedlińsk, Poland, tel. 00 48 48 340 10 00, 00 48 48 384 44 88, fax 00 48 48 384 44 88 wew. 106
www.kratki.com, www.facebook.com/kratkien

ADVANTAGES KOZA AB/S/2/KAFEL AND AB/S/2

- The air income system is possible only from the outside: the primary and secondary air plus the air curtain.
- Improved Acumotte.
  The new formula makes it resistant to any mechanical damage, better accumulates heat and improves combustion performance.
- Improved grate makes the grate mechanism run smoothly while remaining very quiet.
- Recuperation.
  New design allows to install the insert in passive houses and houses with heat recovery systems.
- The stove Complies with standards of the stringent requirements of BImSchV2

	KOZA/AB/S/2	KOZA/AB/S/2/KAFEL/BIALY KOZA/AB/S/DR/KAFEL/CZERWONY KOZA/AB/S/DR/KAFEL/CZARNY
kW	10	10
<kW<	6-12	6-12
	150	150
	~ 80%	~ 80%
	500	500
CO	0,09%	0,09%
°C	280	280
kg	150	-
	boiler steel, liner of the combustion chamber Acumotte, cast iron grate	
	seasonal hardwood (humidity max 20%)	

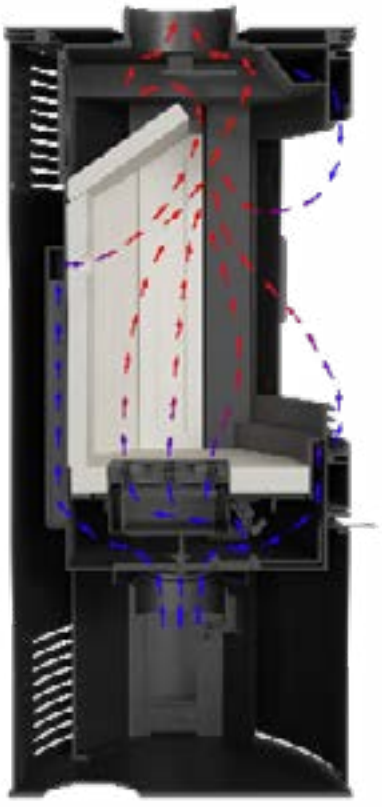

Kratki.pl Marek Bal ul. Warszawska 66, Wsola, 26-660 Jedlińsk, Poland, tel. 00 48 48 340 10 00, 00 48 48 384 44 88, fax 00 48 48 384 44 88 wew. 106
www.kratki.com, www.facebook.com/kratkien

DIMENSIONS KOZA/AB

KOZA/AB

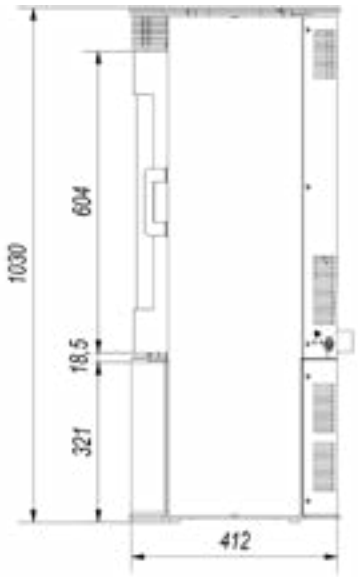

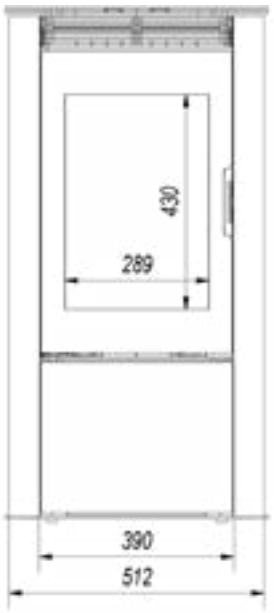

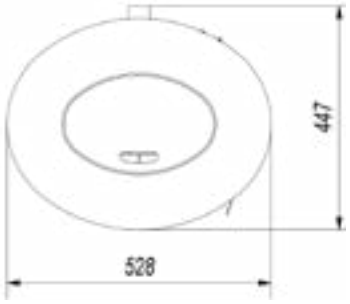

KOZA/AB/S/DR

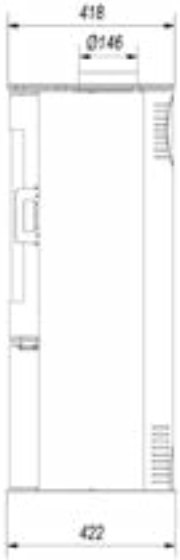

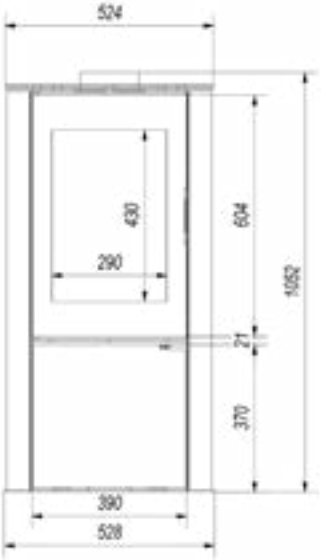

Kratki.pl Marek Bal ul. Warszawska 66, Wsola, 26-660 Jedlińsk, Poland, tel. 00 48 48 340 10 00, 00 48 48 384 44 88, fax 00 48 48 384 44 88 wew. 106
www.kratki.com, www.facebook.com/kratkien

DIMENSIONS KOZA/AB

KOZA/AB/S/N/DR

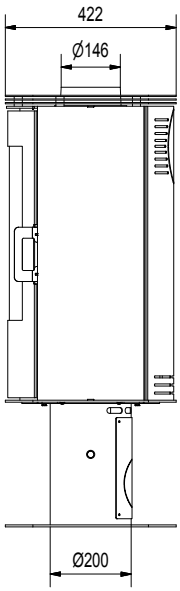

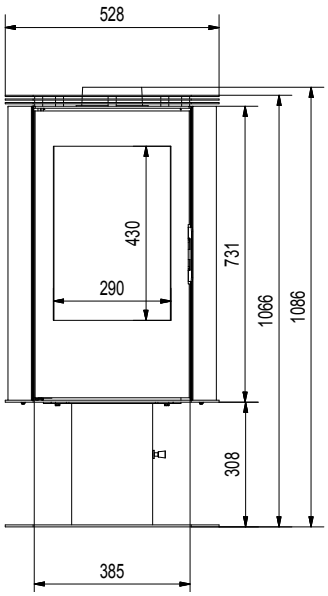

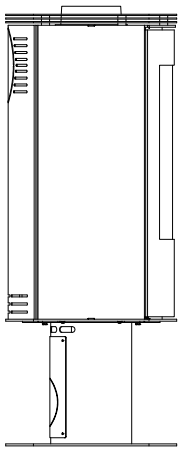

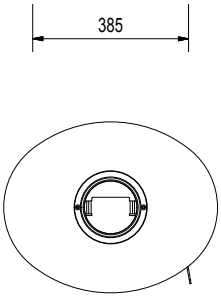

KOZA/AB/S/N/GLASS

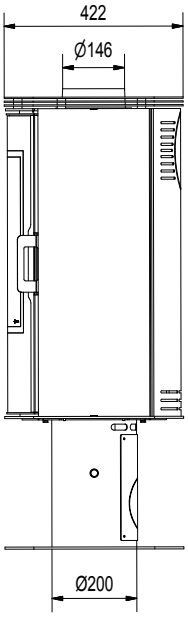

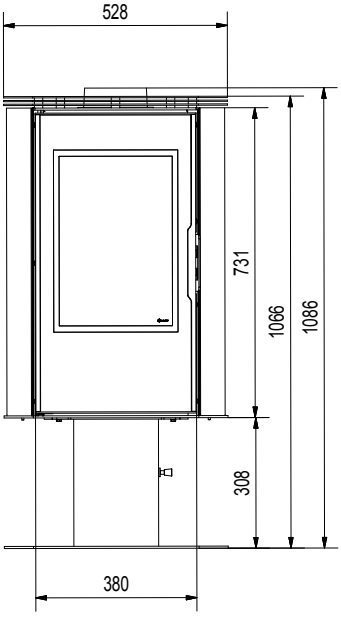

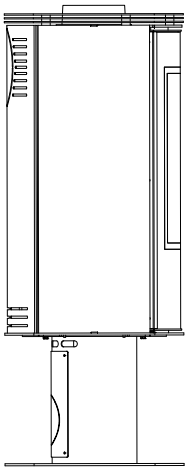

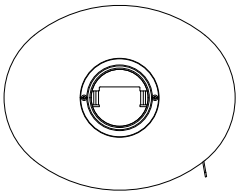

Kratki.pl Marek Bal ul. Warszawska 66, Wsola, 26-660 Jedlińsk, Poland, tel. 00 48 48 340 10 00, 00 48 48 384 44 88, fax 00 48 48 384 44 88 wew. 106
www.kratki.com, www.facebook.com/kratkien

DIMENSIONS KOZA/AB/S

KOZA/AB/S/2

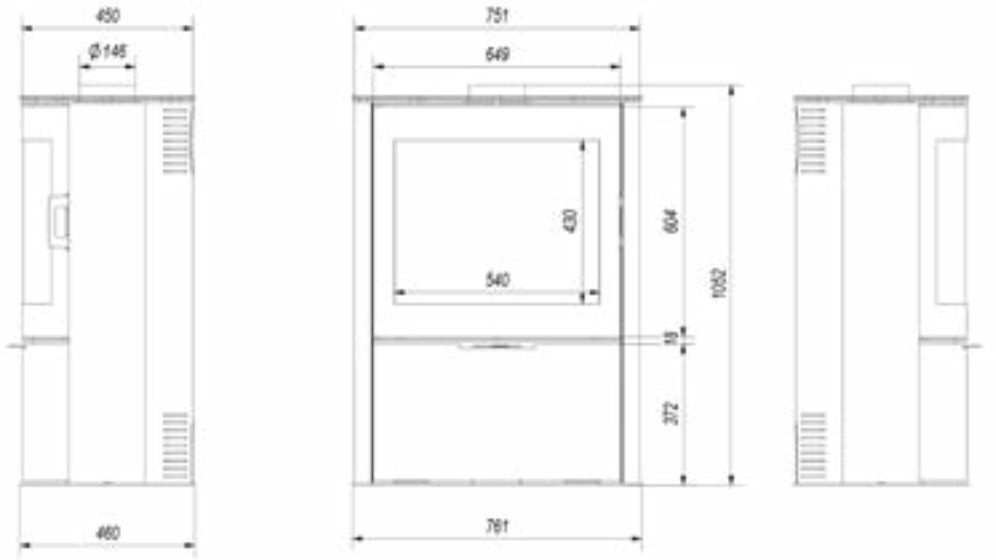

Kratki.pl Marek Bal ul. Warszawska 66, Wsola, 26-660 Jedlińsk, Poland, tel. 00 48 48 340 10 00, 00 48 48 384 44 88, fax 00 48 48 384 44 88 wew. 106
www.kratki.com, www.facebook.com/kratkien